DRAWING LIST FOR TEST PACKAGE

WA-632

PROJECT NO.: 22328D

PROJECT TITLE : M15X Ph2 Project

No	PKG No	UNIT	LINE NUMBER			P&ID		REMARK
			ISO DRAWING No	SHEET	REV	P&ID No	REV	
1	632	2FA	300A-WA-FR1-N-7006-01	1 OF 1	0	CJ-M15W14-PR-A20-000167	2A	
2	632	R2FA	300A-WA-FR1-N-7006-01	1 OF 1	0	CJ-M15W14-PR-A20-000501.502	1A	
3	632	R2FA	250A-WA-FR1-N-7003-01	1 OF 1	0	CJ-M15W14-PR-A20-000501	1A	
4	632	R2FA	200A-WA-FR1-N-7005-01	1 OF 1	0	CJ-M15W14-PR-A20-000501,503	1A	
5	632	R2FA	100A-WA-FR1-N-7020-01	1 OF 1	1	CJ-M15W14-PR-A20-000504	1A	
6	632	R1MF	100A-WA-FR1-N-7020-01	1 OF 1	0	CJ-M15W14-PR-A20-000504	1A	
7	632	R2FA	200A-WA-FR1-N-7004-01	1 OF 1	0	CJ-M15W14-PR-A20-000502,503	1A	

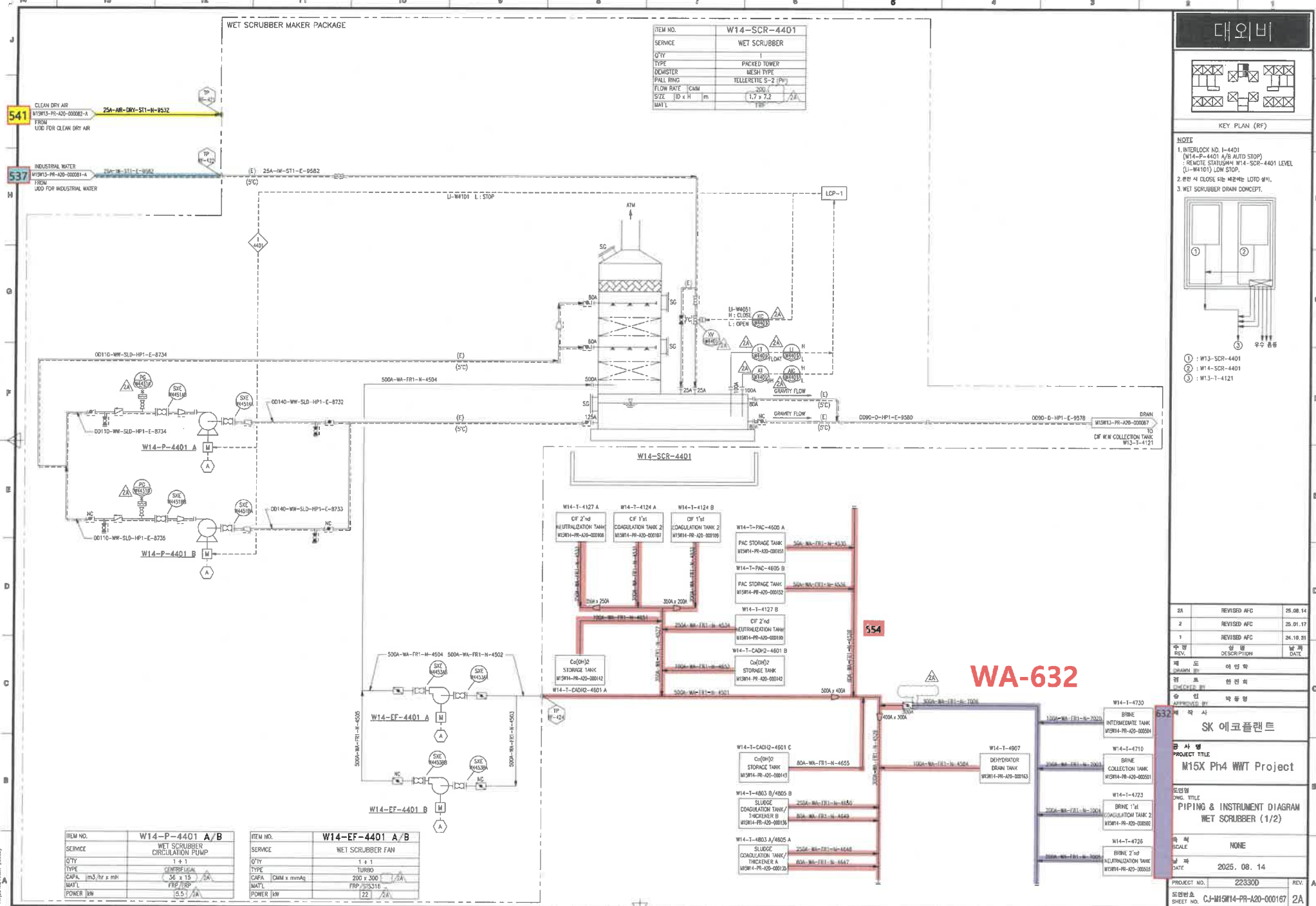

C:WUsersWTOPWDesktopWP&ID251013W[M15X-Ph-4-for 외하기]CAD FILE_0910WCJ-M15W14-PR-A20-000167 R2 P&ID FOR WET S

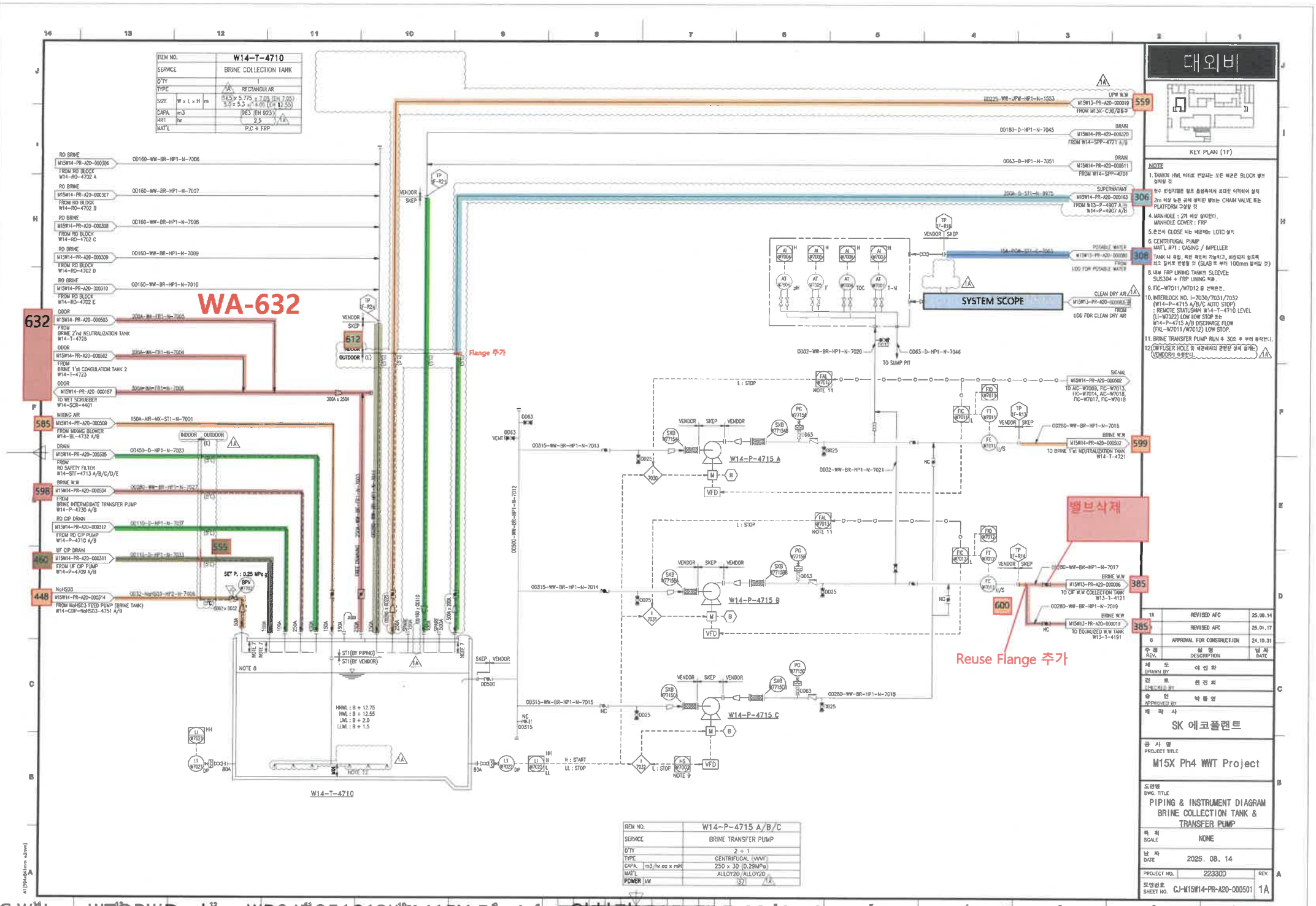
W14-T-4710
BRINE COLLECTION TANK
RECTANGULAR
P.C.4 FRP
W14-P-4715 A/B/C
BRINE TRANSFER PUMP
CENTRIFUGAL (VWP)
ALLOY20/ALLOY20
WA-632
SYSTEM SCOPE
Flange 추가
밸브삭제
Reuse Flange 추가
대외비
KEY PLAN (1F)
NOTE
SK 에코플랜트
M15X Ph4 WWT Project
PIPING & INSTRUMENT DIAGRAM
BRINE COLLECTION TANK &
TRANSFER PUMP
NONE
2025. 08. 14
22330D
CJ-M15W14-PR-A20-000501
1A
REVISED AFC
APPROVAL FOR CONSTRUCTION
C:\Users\WTOPW\Desktop\WP8\ID251013W[M15X-Ph-4 for 인허가]CAD FILE_0910WCJ-M15W14-PR-A20-000501 R1 P&ID FOR BRINE

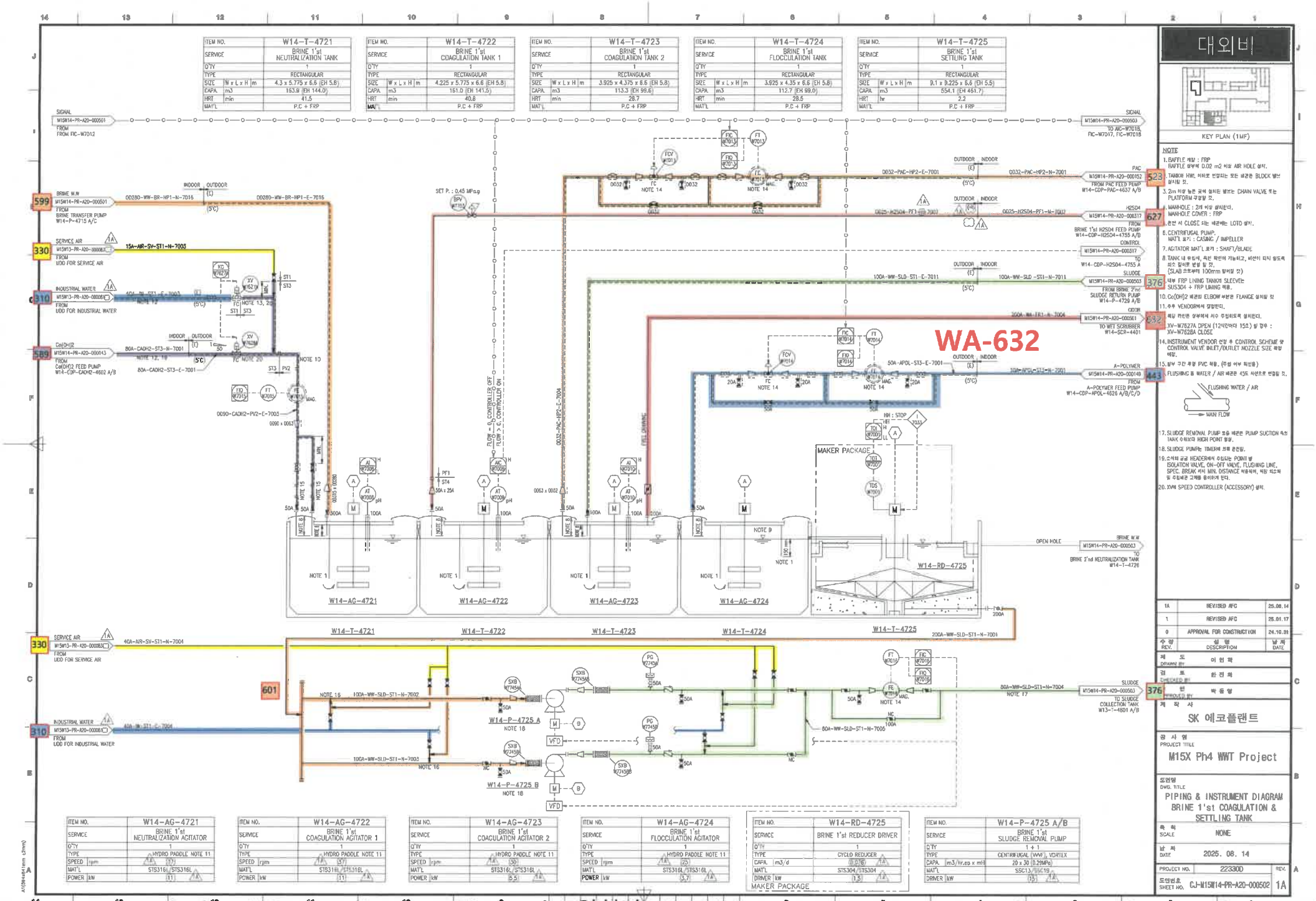

C:₩Users₩TOPW₩Desktop₩P&ID251013₩[M15X Ph 4 for 외주]CAD FILE_0910₩CJ-M15W14-PR-A20-000502 R1 P&ID FOR BRINE

ITEM NO.	W14-T-4726
SERVICE	BRINE 2'nd NEUTRALIZATION TANK
Q'TY	1
TYPE	RECTANGULAR
SIZE W x L x H m	4.1 x 5.775 x 5.6 (EH 5.0)
CAPA. m3	156.3 (EH 118.4)
HRT min	34.1
MAT'L	P.C + FRP

ITEM NO.	W14-T-4727
SERVICE	BRINE 2'nd COAGULATION TANK
Q'TY	1
TYPE	RECTANGULAR
SIZE W x L x H m	4.2 x 5.775 x 5.6 (EH 5.0)
CAPA. m3	160.1 (EH 121.3)
HRT min	34.9
MAT'L	P.C + FRP

ITEM NO.	W14-T-4728
SERVICE	BRINE 2'nd FLOCCULATION TANK
Q'TY	1
TYPE	RECTANGULAR
SIZE W x L x H m	4.7 x 5.775 x 5.6 (EH 5.0)
CAPA. m3	179.1 (EH 135.7)
HRT min	39.1
MAT'L	P.C + FRP

ITEM NO.	W14-T-4729
SERVICE	BRINE 2'nd SETTLING TANK
Q'TY	1
TYPE	RECTANGULAR
SIZE W x L x H m	9.225 x 9.225 x 5.6 (EH 5.0)
CAPA. m3	561.7 (EH 425.5)
HRT hr	2.0
MAT'L	P.C + FRP

ITEM NO.	W14-LP-4729
SERVICE	LAMELLAR PLATE
Q'TY	1
CAPA. W x L x H m	BY VENDOR
SURFACE LOAD	20 m3/m2.d 이하 (Qmax : 5,000m3/d)
MAT'L	ABS+SS304

MAKER PACKAGE

대외비

KEY PLAN (1MF)

NOTE

1. BAFFLE 제작 : FRP
BAFFLE 상부에 0.02 m2 이상 AIR HOLE 설치.
2. TANK의 HWL 이하로 연결되는 모든 배관은 BLOCK 밸브 설치할 것.
3. 2m 이상 높은 곳에 설치된 밸브는 CHAIN VALVE 또는 PLATFORM 구성할 것.
4. MANHOLE : 2개 이상 설치한다.
MANHOLE COVER : FRP
운전 시 CLOSE 되는 배관에는 LOTO 설치.
5. CENTRIFUGAL PUMP.
MAT'L 표기 : CASING / IMPELLER
6. AGITATOR MAT'L 표기 : SHAFT/BLADE
7. TANK 내 유입시, 확산 확인이 가능하고, 배관이 되지 않도록 시스 갖추도록 반영 할 것.
(SLAB 으로부터 100mm 떨어질 것)
8. 내부 FRP LINING TANK의 SLEEVE는 SUS304 + FRP LINING 제품.
9. 위의 모든들의 상세사양은 추후 VENDOR에서 결정한다.
10. INSTRUMENT VENDOR 선정 후 CONTROL SCHEME 및 CONTROL VALVE INLET/OUTLET NOZZLE SIZE 확정 예정.
11. FLUSHING 용 WATER / AIR 배관은 45도 사선으로 연결할 것.

12. SLUDGE REMOVAL PUMP 흡입 배관은 PUMP SUCTION 측의 TANK 수위보다 HIGH POINT 설치.
13. DELETED.
14. G-8 VENDOR에서 결정한다.
15. DELETED.
16. DELETED.
17. DELETED.
18. 상세한 것은 향 유체관리시방서 PACKAGE VENDOR 공급범위에 포함할 것.
19. SLUDGE PUMP는 TIMER에 의해 운전됨.

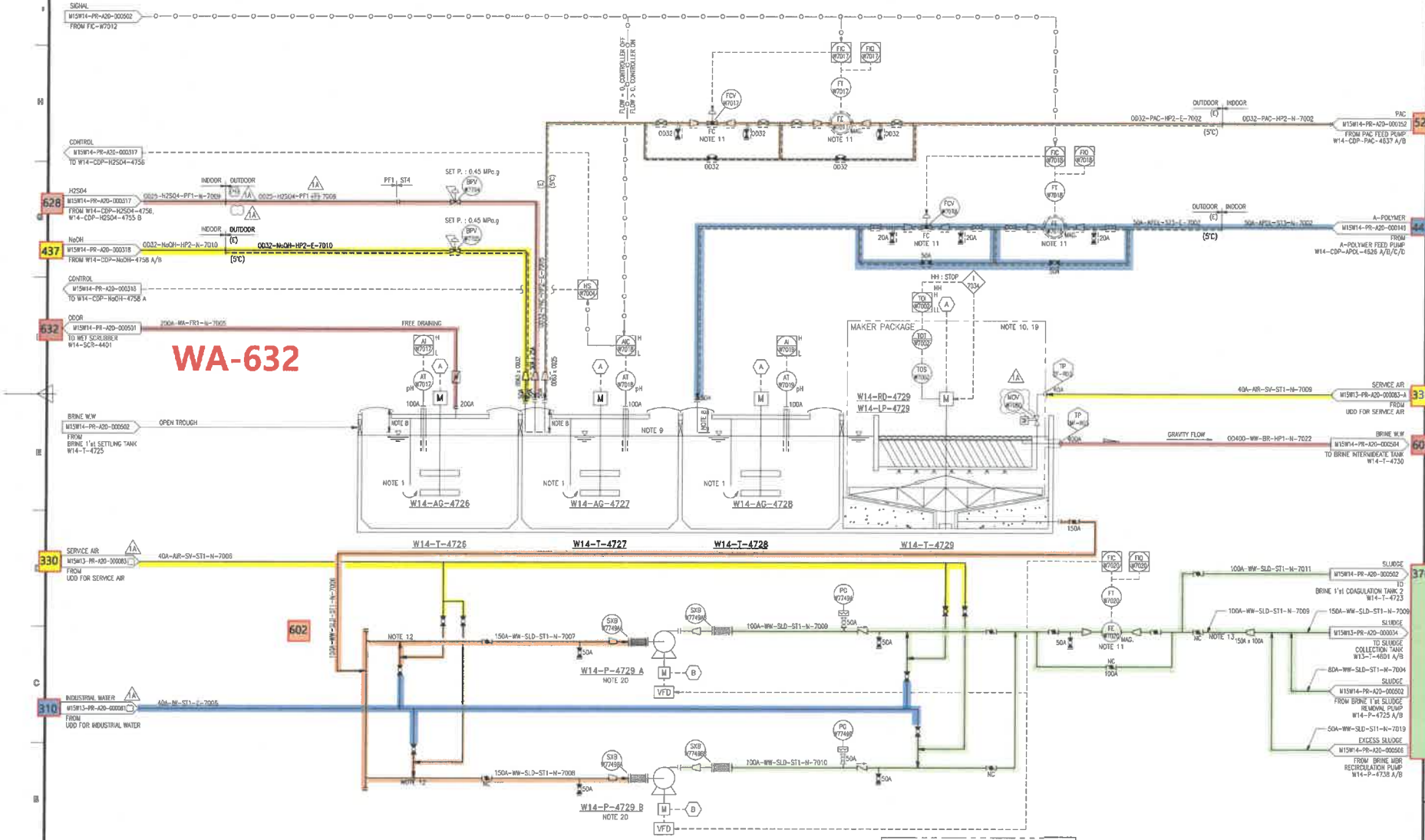

ITEM NO.	W14-AG-4726
SERVICE	BRINE 2'nd NEUTRALIZATION AGITATOR
Q'TY	1
TYPE	HYDRO PADDLE NOTE 15
SPEED rpm	37
MAT'L	STS316L/STS316L
POWER kW	3.7

ITEM NO.	W14-AG-4727
SERVICE	BRINE 2'nd COAGULATION AGITATOR
Q'TY	1
TYPE	HYDRO PADDLE NOTE 15
SPEED rpm	32
MAT'L	STS316L/STS316L
POWER kW	7.5

ITEM NO.	W14-AG-4728
SERVICE	BRINE 2'nd FLOCCULATION AGITATOR
Q'TY	1
TYPE	HYDRO PADDLE NOTE 15
SPEED rpm	25
MAT'L	STS316L/STS316L
POWER kW	3.7

MAKER PACKAGE

ITEM NO.	W14-RD-4729
SERVICE	BRINE 2'nd REDUCER DRIVER
Q'TY	1
TYPE	CYCLO REDUCER
CAPA. m3/d	0.07
MAT'L	STS304/STS304
POWER kW	1.5

ITEM NO.	W14-P-4729 A/B
SERVICE	BRINE 2'nd SLUDGE RETURN PUMP
Q'TY	1 + 1
TYPE	CENTRIFUGAL (VAR), VORTEX
CAPA. m3/hr.ea x mH	40 x 30 (0.29MPa)
MAT'L	SSC13/SSC19
POWER kW	30

REV.	형 태 DESCRIPTION	년 월 일 DATE
1A	REVISED AFC	25.08.14
1	REVISED AFC	25.01.17
0	APPROVAL FOR CONSTRUCTION	24.10.31

도 DRAWN BY	이 영 락
도 CHECKED BY	한 건 희
안 APPROVED BY	박 동 영
작 사	SK 에코플랜트
사 명 PROJECT TITLE	M15X Ph4 WWT Project
도면명 DWG. TITLE	PIPING & INSTRUMENT DIAGRAM BRINE 2'nd COAGULATION & SETTLING TANK
축 척 SCALE	NONE
년 월 일 DATE	2025. 08. 14
PROJECT NO.	223300
도면번호 SHEET NO.	CJ-M15W14-PR-A20-000503 1A

C:\Users\TOPWDesktop\WR&ID251013\[M15X Ph 4 for 인허가]CAD FILE_0910\CJ-M15W14-PR-A20-000503 R1 P&ID FOR BRINE

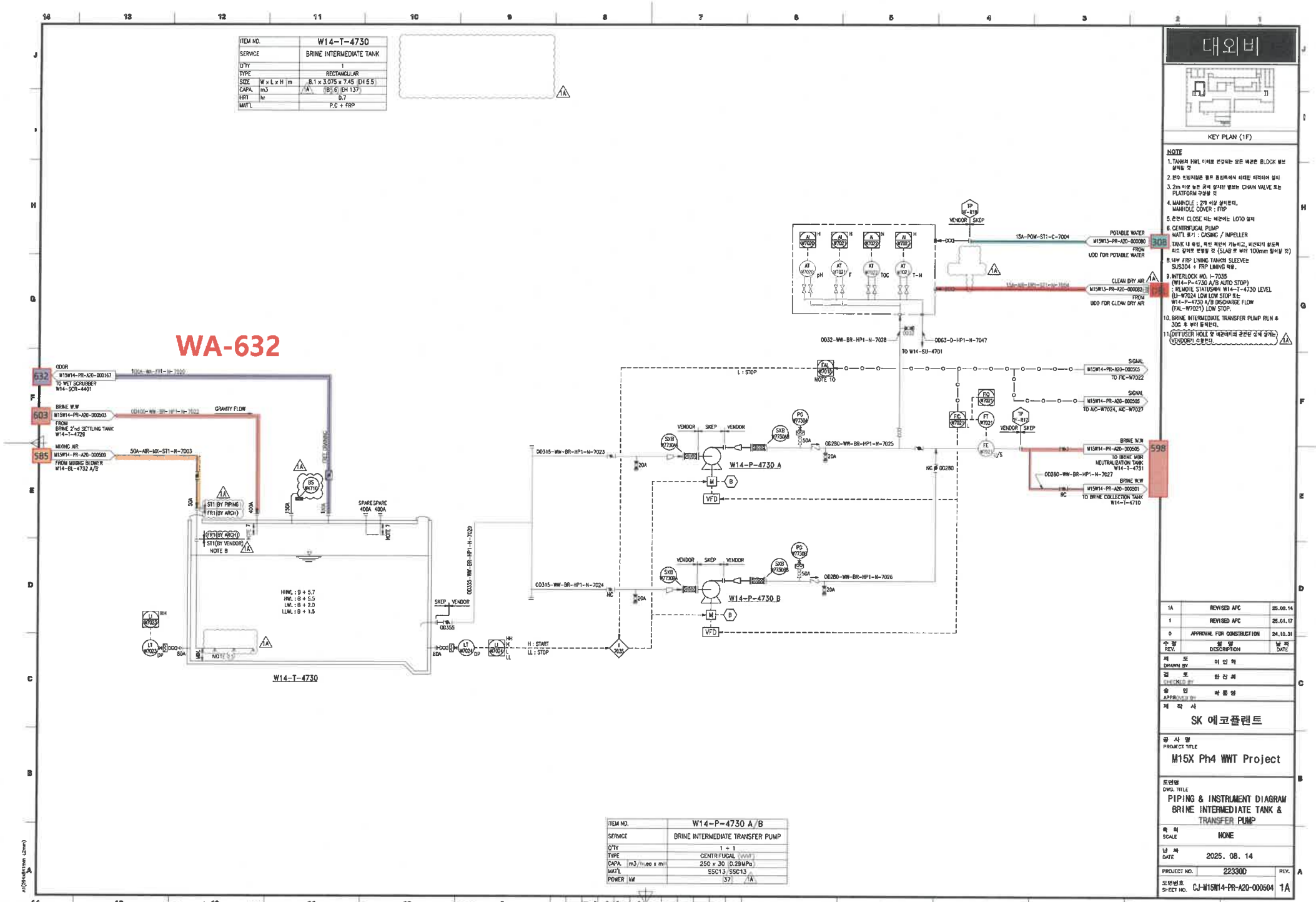

C:WUsersWTOPWDesktopWP&ID251013W[M15X-Ph-4-for 원하기]CAD FILE_0910WCJ-M15W14-PR-A20-000504 R1 P&ID FOR BRINE

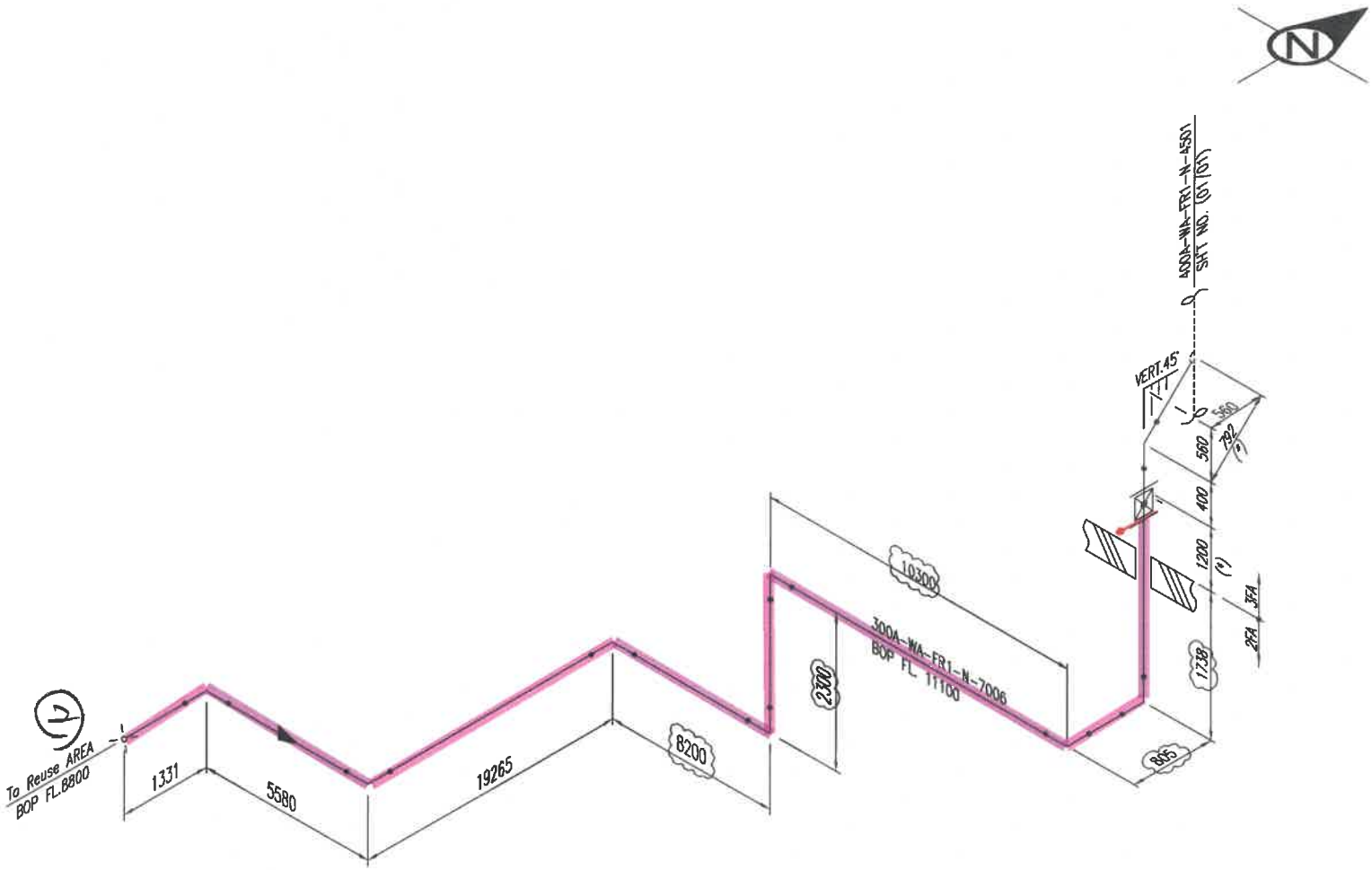

<NOTE>
1. (*) FIELD ADJUST

ITEM	SIZE	Q'TY	DESCRIPTION
		FR1	
P	300A	51.9M	PIPE, FRP(MANUFACTURER STD), PE/BUTT-JOINT, 4.8T
E90	300A	7EA	ELBOW 90 DEG, FRP(MANUFACTURER STD), BUTT-JOINT, 4.8T
E45	300A	1EA	ELBOW 45 DEG, FRP(MANUFACTURER STD), BUTT-JOINT, 4.8T
VP	300A	1EA	DAMPER, KS 10K, FF, BODY-FRP / ORING-EPDM, LEVER
F	300A	1EA	FLG, KS 10K, FF, FRP(MANUFACTURER STD), BUTT-JOINT
G	300A	1EA	GASKET, KS 10K, FF, EPDM, 3.0MM THK
B	300A	2SET	MACHINE BOLT & NUTS :STS 304 / W WASHERS

* PIPE : P/P1 * 90 ELBOW : E90 * 45 ELBOW : E45 * TEE : T * RED.TEE : TR * STUB-IN : STU * REINFORCING PAD : RP * CON.RED : RC * ECC.RED : RE * CON.SWAGE : RCS/RCS1 * ECC.SWAGE : RES/RES1 * NIPPLE : NP/NP1/NP2 * CAP : CAP/CAP1 * PLUG : PLG * FULL COUPLING : FC * HALF COUPLING : HF/HF1
* STUB-IN : STU * SOCKET(HDPE/PVC) : SC * SADDLE(HDPE) : SD * FLANGE : F/F1 * GASKET : G/G1/G2 * BOLT & NUT : B/B1 * BLIND FLANGE : FB/FB1 * GATE VA. : VG/VG1/VG2 * BALL VA. : VB/VBLO/VB1/VB1LO/VB2/VB2LO * BUTTERFLY VA. : VF/VF4 * CHECK VA. : VC/VC1/VC2/VC3/VC4/VC5/VC6/VC7
* GLOBE VA. : VL/VL1/VL2 * DIAPHRAGM VA. : VD/VDLO * DAMPER : VP * QUICK COUPLING : SQC * FLEXIBLE JOINT(STEEL) : FLXB * FLEXIBLE JOINT(RUBBER) : FLXR * FLEXIBLE JOINT(STEEL PTFE LINED) : FLXL * FLEXIBLE HOSE : FLXH * STEAM TRAP : ST * SPRAY NOZZLE : SPN * EMERGENCY SHOWER : SSH
* STRAINER(Y-TYPE) : YSTR * STRAINER(T-TYPE) : TSTR * STRAINER(BUCKET-TYPE) : BSTR * ANCHOR PLATE : STOP * BIRD SCREEN : BS * ISOLATION KIT : IK * UNLOADING BOX : UB * AIR TRAP : AT * LOTO : LOTO * SIGHT GLASS : SG * PRESSURE GAUGE : PG * SHILED : SH * SPECIAL BOLT & NUT : BL/BL1

CLIENT
SK hynix

INSULATION	CODE	N	CONDITION	PRESS. (kg/cm2g)	TEMP. (°C)
	THICK.	-	DESIGN	1	AMB
			OPERATING	ATM	AMB

AREA W14
UNIT 2FA
REF. PLAN DWG. CJ-M15W14-PI-A30-020011-G
REF. P & ID CJ-M15W14-PR-A20-000167

REV. NO.	DATE	DESCRIPTION	BY	CHK	APP'D
0	24.12.20	APPROVED FOR CONSTRUCTION	황래종	안남후	박동영

CONTRACTOR SK ecoplant
COMMODITY WA
LINE NO. 300A-WA-FR1-N-7006
PROJECT NAME M15X Ph4 Project
JOB NO. 22330D
SH'T NO. 01 / 01
REV. 0

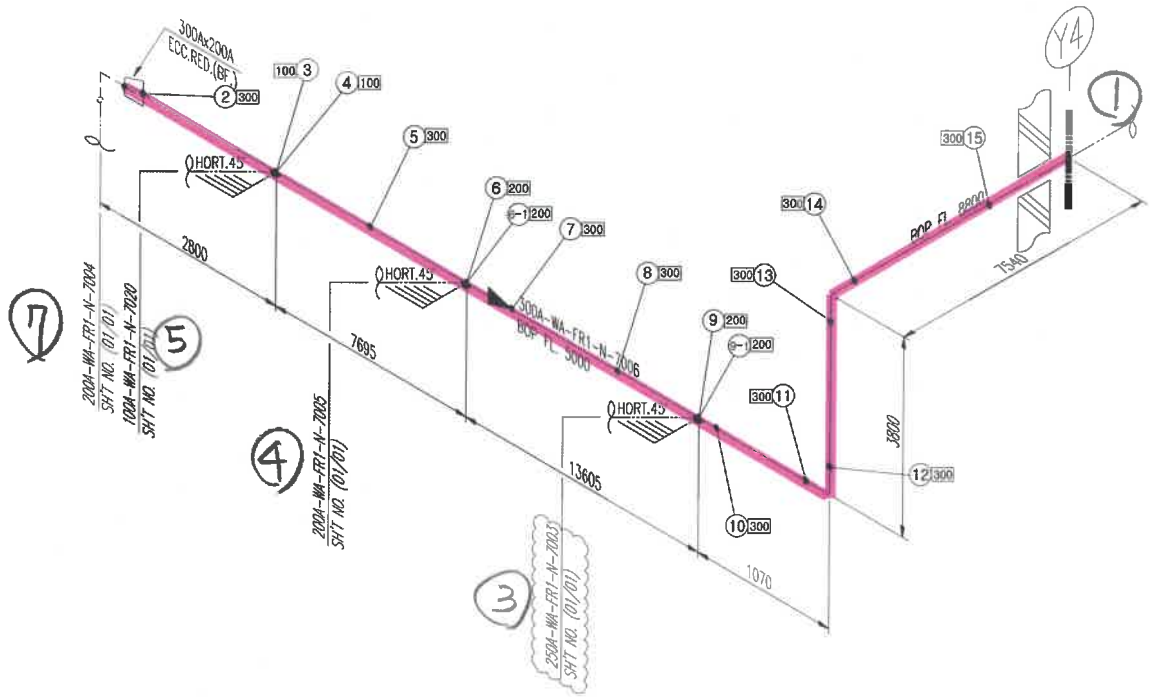

ITEM	SIZE	Q'TY	DESCRIPTION
		FR1	
P	300A	36.5M	PIPE, FRP(MANUFACTURER STD), PE/BUTT-JOINT, 4.8T
E90	300A	2EA	ELBOW 90 DEG, FRP(MANUFACTURER STD), BUTT-JOINT, 4.8T
RE	300Ax200A	1EA	REDUCER ECC, FRP(MANUFACTURER STD), BUTT-JOINT, 4.8T
STU	300Ax100A	1EA	STUB-IN BRANCH
STU	300Ax200A	2EA	STUB-IN BRANCH

<NOTE>
1. TRAY & ANGLE,CHANNEL SUPPORT가 적용되는 배관 ELEVATION은 현장 맞춤으로 한다.
2. (*) FIELD ADJUST

* PIPE : P/P1 * 90° ELBOW : E90 * 45° ELBOW : E45 * TEE : T * RED.TEE : TR * STUB-IN : STU * REINFORCING PAD : RP * CON.RED : RC * ECC.RED : RE * CON.SWAGE : RCS/RCS1 * ECC.SWAGE : RES/RES1 * NIPPLE : NP/NP1/NP2 * CAP : CAP/CAP1 * PLUG : PLG * FULL COUPLING : FC * HALF COUPLING : HF/HF1
* STUB-IN : STU * SOCKET(HDPE/PVC) : SC * SADDLE(HDPE) : SD * FLANGE : F/F1 * GASKET : G/G1/G2 * BOLT & NUT : B/B1 * BLIND FLANGE : FB/FB1 * GATE VA. : VG/VG1/VG2 * BALL VA. : VB/VB1L0/VB1/VB1L0/VB2/VB2L0 * BUTTERFLY VA. : VF/VF4 * CHECK VA. : VC/VC1/VC2/VC3/VC4/VC5/VC6/VC7
* GLOBE VA. : VL/VL1/VL2 * DIAPHRAGM VA. : VD/VD1L0 * DAMPER : VP * QUICK COUPLING : SQC * FLEXIBLE JOINT(STEEL) : FLXB * FLEXIBLE JOINT(RUBBER) : FLXR * FLEXIBLE JOINT(STEEL PTFE LINED) : FLXL * FLEXIBLE HOSE : FLXH * STEAM TRAP : ST * SPRAY NOZZLE : SPN * EMERGENCY SHOWER : SSH
* STRAINER(Y-TYPE) : YSTR * STRAINER(T-TYPE) : TSTR * STRAINER(BUCKET-TYPE) : BSTR * ANCHOR PLATE : STOP * BIRD SCREEN : BS * ISOLATION KIT : IK * UNLOADING BOX : UB * AIR TRAP : AT * LOTO : LOTO * SIGHT GLASS : SG * PRESSURE GAUGE : PG * SHILED : SH * SPECIAL BOLT & NUT : BL/BL1

CLIENT SK hynix

INSULATION	CODE	N	CONDITION	PRESS. (kg/cm2g)	TEMP. (°C)
	THICK.	-	DESIGN	6.4	60
			OPERATING	4	AMB

AREA W14
UNIT R2FA
REF. PLAN DWG. CJ-M15W14-PI-A30-020016-C
REF. P & ID CJ-M15W14-PR-A20-000502,000501

REV. NO.	DATE	DESCRIPTION	BY	CHK	APP'D
0	25.01.24	APPROVED FOR CONSTRUCTION	황래종	안남후	박동영

CONTRACTOR SK ecoplant
COMMODITY WA
LINE NO. 300A-WA-FR1-N-7006
PROJECT NAME M15X Ph4 Project
JOB NO. 22330D
SH'T NO. 01 / 01 REV. 0

경고 : 본 도면은 SK HYNIX의 가업비밀 자료로서, 어떠한 경우에도 목적 외 사용, 복제, 제3자에게 공개, 누설 및 유출할 수 없으며, 회사는 유포자의 불법 사용으로 피해가 발생할 경우 유포자에게 민/형사상 책임을 요구할 수 있음.

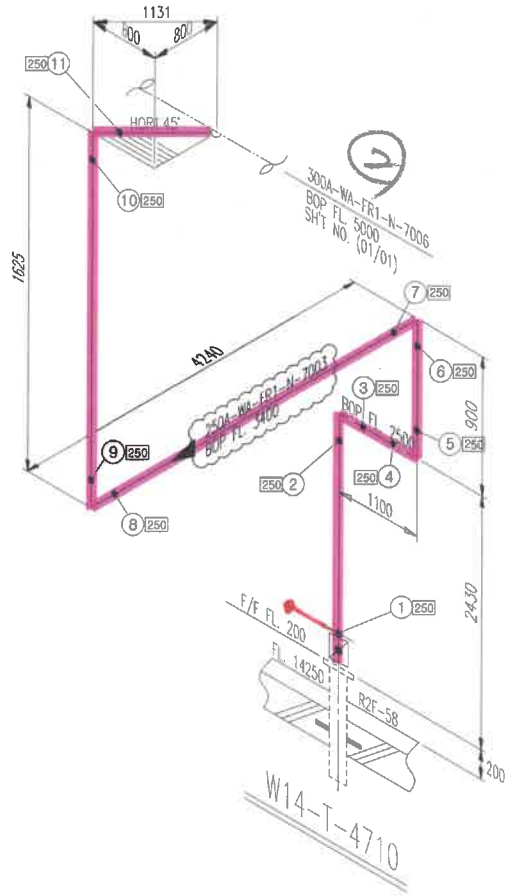

ITEM	SIZE	Q'TY	DESCRIPTION
		FR1	
P	250A	11.4M	PIPE, FRP(MANUFACTURER STD), PE/BUTT-JOINT, 4.8T
E90	250A	5EA	ELBOW 90 DEG, FRP(MANUFACTURER STD), BUTT-JOINT, 4.8T
F	250A	1EA	FLG, KS 10K, FF, FRP(MANUFACTURER STD), BUTT-JOINT
G	250A	2EA	GASKET, KS 10K, FF, EPDM, 3.0MM TH'K
INC	251X250A	11.4M	2 분할(2개 결합) + 설치용 CASING
VP	250A	1EA	DAMPER, KS 10K, FF, BODY-FRP / ORING-EPDM, LEVER
B	250A	2SET	MACHINE BOLT & NUTS :S15 304 / W WASHERS

<NOTE>
1. TRAY & ANGLE,CHANNEL SUPPORT가 적용되는 배관 ELEVATION은 현장 맞춤으로 한다.
2. (*) FIELD ADJUST

* PIPE : P/P1 * 90° ELBOW : E90 * 45° ELBOW : E45 * TEE : T * RED.TEE : TR * STUB-IN : STU * REINFORCING PAD : RP * CON.RED : RC * ECC.RED : RE * CON.SWAGE : RCS/WCS1 * ECC.SWAGE : RES/WES1 * NIPPLE : NP/NP1/NP2 * CAP : CAP/CAP1 * PLUG : PLG * FULL COUPLING : FC * HALF COUPLING : HF/HF1
* STUB-IN : STU * SOCKET(HDPE/PVC) : SC * SADDLE(HDPE) : SD * FLANGE : F/F1 * GASKET : G/G1/G2 * BOLT & NUT : B/B1 * BLIND FLANGE : FB/FB1 * GATE VA. : VG/VG1/VG2 * BALL VA. : VB/VBLO/VB1/VB1LO/VB2/VB2LO * BUTTERFLY VA. : VF/VF4 * CHECK VA. : VC/VC1/VC2/VC3/VC4/VC5/VC6/VC7
* GLOBE VA. : VL/VL1/VL2 * DIAPHRAGM VA. : VD/VDLO * DAMPER : VP * QUICK COUPLING : SQC * FLEXIBLE JOINT(STEEL) : FLXB * FLEXIBLE JOINT(RUBBER) : FLXR * FLEXIBLE JOINT(STEEL_PTFE LINED) : FLXL * FLEXIBLE HOSE : FLXH * STEAM TRAP : ST * SPRAY NOZZLE : SPN * EMERGENCY SHOWER : SSH
* STRAINER(Y-TYPE) : YSTR * STRAINER(T-TYPE) : TSTR * STRAINER(BUCKET-TYPE) : BSTR * ANCHOR PLATE : STOP * BIRD SCREEN : BS * ISOLATION KIT : IK * UNLOADING BOX : UB * AIR TRAP : AT * LOTO : LOTO * SIGHT GLASS : SG * PRESSURE GAUGE : PG * SHILED : SH * SPECIAL BOLT & NUT : BL/BL1

CLIENT SK hynix

INSULATION	CODE	N	CONDITION	PRESS. (kg/cm2g)	TEMP. (°C)
	THICK.	–	DESIGN	6.4	60
			OPERATING	4	AMB

AREA W14
UNIT R2FA
REF. PLAN DWG. CJ-M15W14-PI-A30-020016-A
REF. P & ID CJ-M15W14-PR-A20-000501

REV. NO.	DATE	DESCRIPTION	BY	CHK	APP'D
0	25.03.31	APPROVED FOR CONSTRUCTION	황래종	안남우	박동영

CONTRACTOR SK ecoplant
COMMODITY WA
LINE NO. 250A-WA-FR1-N-7003
PROJECT NAME M15X Ph4 Project
JOB NO. 22330D
SH'T NO. 01 / 01
REV. 0

경고 : 본 도면은 SK HYNIX의 기업비밀 자료로서, 어떠한 경우에도 목적 외 사용, 복제, 제3자에게 공개, 누설 및 유출할 수 없으며, 회사는 유포자의 불법 사용으로 피해가 발생할 경우 유포자에게 민/형사상 책임을 요구할 수 있음.

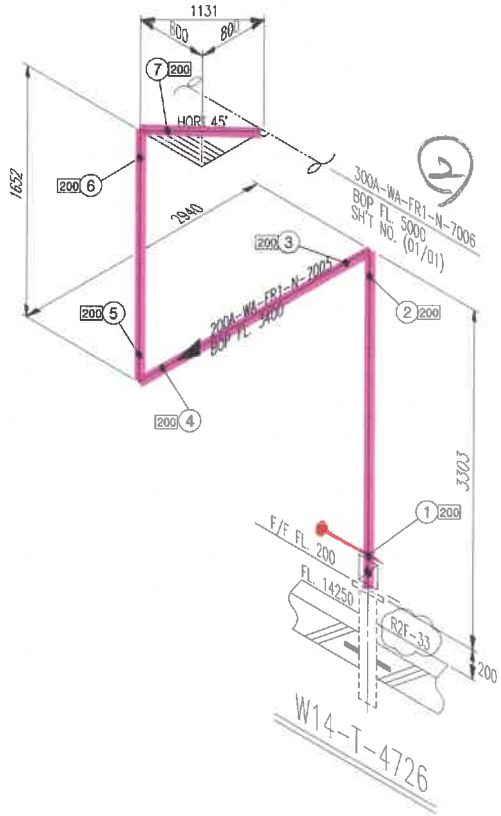

<NOTE>
1. TRAY & ANGLE,CHANNEL SUPPORT가 적용되는 배관 ELEVATION은 현장 맞춤으로 한다.
2. (*) FIELD ADJUST

SK ecoplant

ITEM	SIZE	Q'TY	DESCRIPTION
		FR1	
P	200A	9.0M	PIPE, FRP(MANUFACTURER STD), PE/BUTT-JOINT, 3.2T
E90	200A	3EA	ELBOW 90 DEG, FRP(MANUFACTURER STD), BUTT-JOINT, 3.2T
F	200A	1EA	FLG. KS 10K, FF, FRP(MANUFACTURER STD), BUTT-JOINT
VP	200A	1EA	DAMPER, KS 10K, FF, BODY-FRP / ORING-EPDM, LEVER
G	200A	2EA	GASKET, KS 10K, FF, EPDM, 3.0MM TH'K
B	200A	2SET	MACHINE BOLT & NUTS :STS 304 / W WASHERS

* PIPE : P/P1 * 90° ELBOW : E90 * 45° ELBOW : E45 * TEE : T * RED.TEE : TR * STUB-IN : STU * REINFORCING PAD : RP * CON.RED : RC * ECC.RED : RE * CON.SWAGE : RCS/RCS1 * ECC.SWAGE : RES/RES1 * NIPPLE : NP/NP1/NP2 * CAP : CAP/CAP1 * PLUG : PLG * FULL COUPLING : FC * HALF COUPLING : HF/HF1
* STUB-IN : STU * SOCKET(HDPE/PVC) : SC * SADDLE(HDPE) : SD * FLANGE : F/F1 * GASKET : G/G1/G2 * BOLT & NUT : B/B1 * BLIND FLANGE : FB/FB1 * GATE VA. : VG/VG1/VG2 * BALL VA. : VB/VBLO/VB1/VB1LO/VB2/VB2LO * BUTTERFLY VA. : VF/VF4 * CHECK VA. : VC/VC1/VC2/VC3/VC4/VC5/VC6/VC7
* GLOBE VA. : VL/VL1/VL2 * DIAPHRAGM VA. : VD/VDLO * DAMPER : VP * QUICK COUPLING : SQC * FLEXIBLE JOINT(STEEL) : FLXB * FLEXIBLE JOINT(RUBBER) : FLXR * FLEXIBLE JOINT(STEEL PTFE LINED) : FLXT * FLEXIBLE HOSE : FLXH * STEAM TRAP : ST * SPRAY NOZZLE : SPN * EMERGENCY SHOWER : SSH
* STRAINER(Y-TYPE) : YSTR * STRAINER(T-TYPE) : TSTR * STRAINER(BUCKET-TYPE) : BSTR * ANCHOR PLATE : STOP * BIRD SCREEN : BS * ISOLATION KIT : IK * UNLOADING BOX : UB * AIR TRAP : AT * LOTO : LOTO * SIGHT GLASS : SG * PRESSURE GAUGE : PG * SHILED : SH * SPECIAL BOLT & NUT : BL/BL1

CLIENT SK hynix

4

INSULATION	CODE	N	CONDITION	PRESS. (kg/cm2g)	TEMP. (°C)
	THICK.	–	DESIGN	6.4	60
			OPERATING	4	AMB

AREA W14
UNIT R2FA
REF. PLAN DWG. CJ-M15W14-PI-A30-020015-A
REF. P & ID CJ-M15W14-PR-A20-000501,000503

REV. NO.	DATE	DESCRIPTION	BY	CHK	APP'D
0	25.01.24	APPROVED FOR CONSTRUCTION	황계종	안남후	박동영

CONTRACTOR SK ecoplant
COMMODITY WA
LINE NO. 200A-WA-FR1-N-7005
PROJECT NAME M15X Ph4 Project
JOB NO. 22330D
SH'T NO. 01 / 01
REV. 0

경고 : 본 도면은 SK HYNIX의 기업비밀 자료로서, 어떠한 경우에도 목적 외 사용, 복제, 제3자에게 공개, 누설 및 유출할 수 없으며, 회사는 유포자의 불법 사용으로 피해가 발생할 경우 유포자에게 민/형사상 책임을 요구할 수 있음.

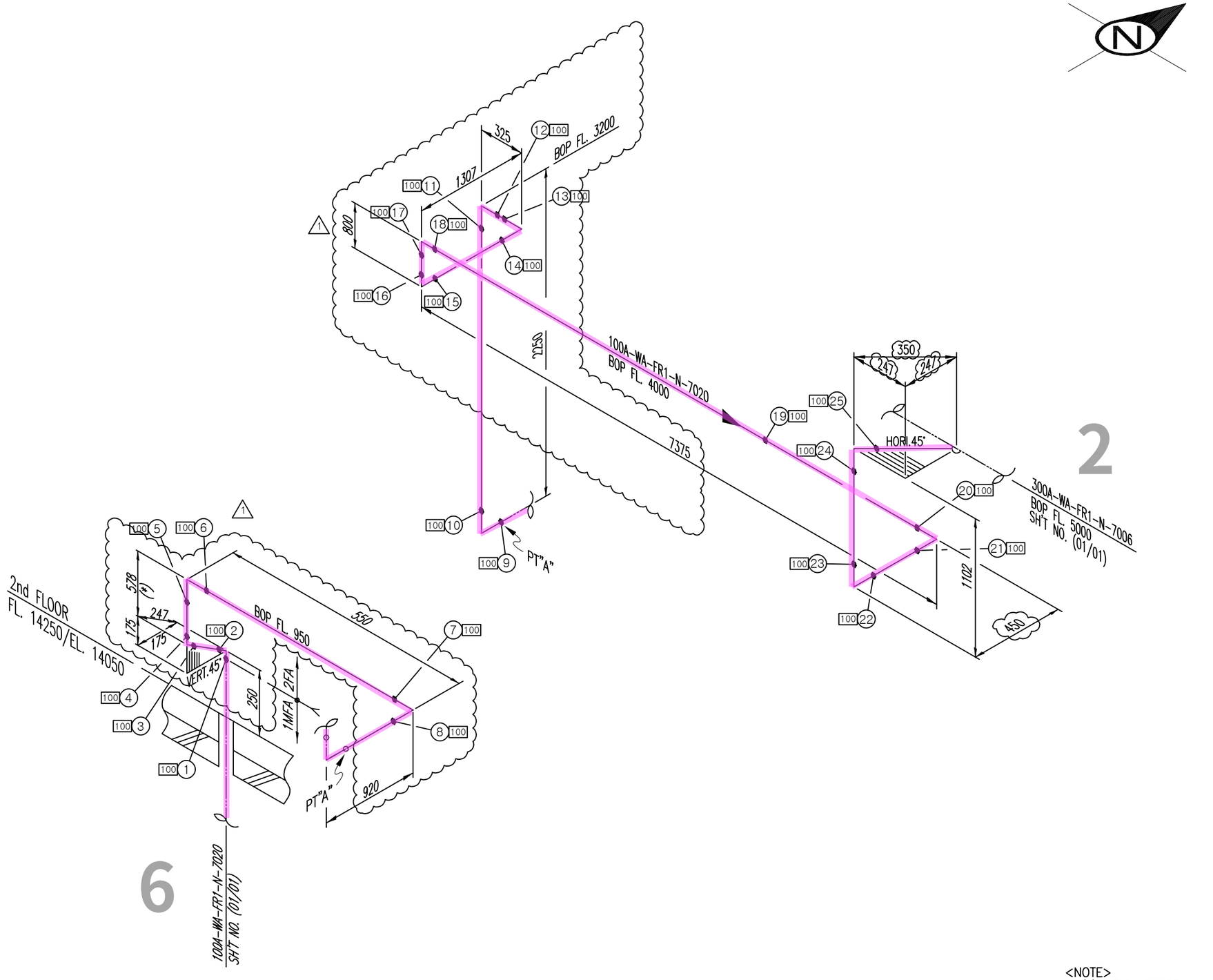

<NOTE>
1. (*) FIELD ADJUST

ITEM	SIZE	Q'TY	DESCRIPTION
		FR1	
P	100A	16.1M	PIPE, FRP(MANUFACTURER STD), PE/BUTT-JOINT, 3.2T
E90	100A	10EA	ELBOW 90 DEG, FRP(MANUFACTURER STD), BUTT-JOINT, 3.2T
E45	100A	2EA	ELBOW 45 DEG, FRP(MANUFACTURER STD), BUTT-JOINT, 3.2T
		1	

* PIPE : P/P1 * 90° ELBOW : E90 * 45° ELBOW : E45 * TEE : T * RED.TEE : TR * STUB-IN : STU * REINFORCING PAD : RP * CON.RED : RC * ECC.RED : RE * CON.SWAGE : RCS/RCS1 * ECC.SWAGE : RES/RES1 * NIPPLE : NP/NP1/NP2 * CAP : CAP/CAP1 * PLUG : PLG * FULL COUPLING : FC * HALF COUPLING : HF/HF1
* STUB-IN : STU * SOCKET(HDPE/PVC) : SC * SADDLE(HDPE) : SD * FLANGE : F/F1 * GASKET : G/G1/G2 * BOLT & NUT : B/B1 * BLIND FLANGE : FB/FB1 * GATE VA. : VG/VG1/VG2 * BALL VA. : VB/VBLO/VB1/VB1LO/VB2/VB2LO * BUTTERFLY VA. : VF/VF4 * CHECK VA. : VC/VC1/VC2/VC3/VC4/VC5/VC6/VC7
* GLOBE VA. : VL/VL1/VL2 * DIAPHRAGM VA. : VD/VDLO * DAMPER : VP * QUICK COUPLING : SQC * FLEXIBLE JOINT(STEEL) : FLXB * FLEXIBLE JOINT(RUBBER) : FLXR * FLEXIBLE JOINT(STEEL_PTFE LINED) : FLXL * FLEXIBLE HOSE : FLXH * STEAM TRAP : ST * SPRAY NOZZLE : SPN * EMERGENCY SHOWER : SSH
* STRAINER(Y-TYPE) : YSTR * STRAINER(T-TYPE) : TSTR * STRAINER(BUCKET-TYPE) : BSTR * ANCHOR PLATE : STOP * BIRD SCREEN : BS * ISOLATION KIT : IK * UNLOADING BOX : UB * AIR TRAP : AT * LOTO : LOTO * SIGHT GLASS : SG * PRESSURE GAUGE : PG * SHILED : SH * SPECIAL BOLT & NUT : BL/BL1

CLIENT SK hynix

5

INSULATION	CODE	N	CONDITION	PRESS. (kg/cm2g)	TEMP. (°C)
	THICK.	–	DESIGN	6.4	60
			OPERATING	4	AMB

AREA W14
UNIT R2FA
REF. PLAN DWG. CJ-M15W14-PI-A30-020015-A
REF. P & ID CJ-M15W14-PR-A20-000504

REV. NO.	DATE	DESCRIPTION	BY	CHK	APP'D
1	25.03.31	REVISED AS MARKED	황래종	안남후	박동영
0	25.01.24	APPROVED FOR CONSTRUCTION	황래종	안남후	박동영

CONTRACTOR SK ecoplant
COMMODITY WA
LINE NO. 100A-WA-FR1-N-7020
PROJECT NAME M15X Ph4 Project
JOB NO. 22330D
SH'T NO. 01 / 01
REV. 1

경고 : 본 도면은 SK HYNIX의 기업비밀 자료로서, 어떠한 경우에도 목적 외 사용, 복제, 제3자에게 공개, 누설 및 유출할 수 없으며, 회사는 유포자의 불법 사용으로 피해가 발생할 경우 유포자에게 민/형사상 책임을 요구할 수 있음.

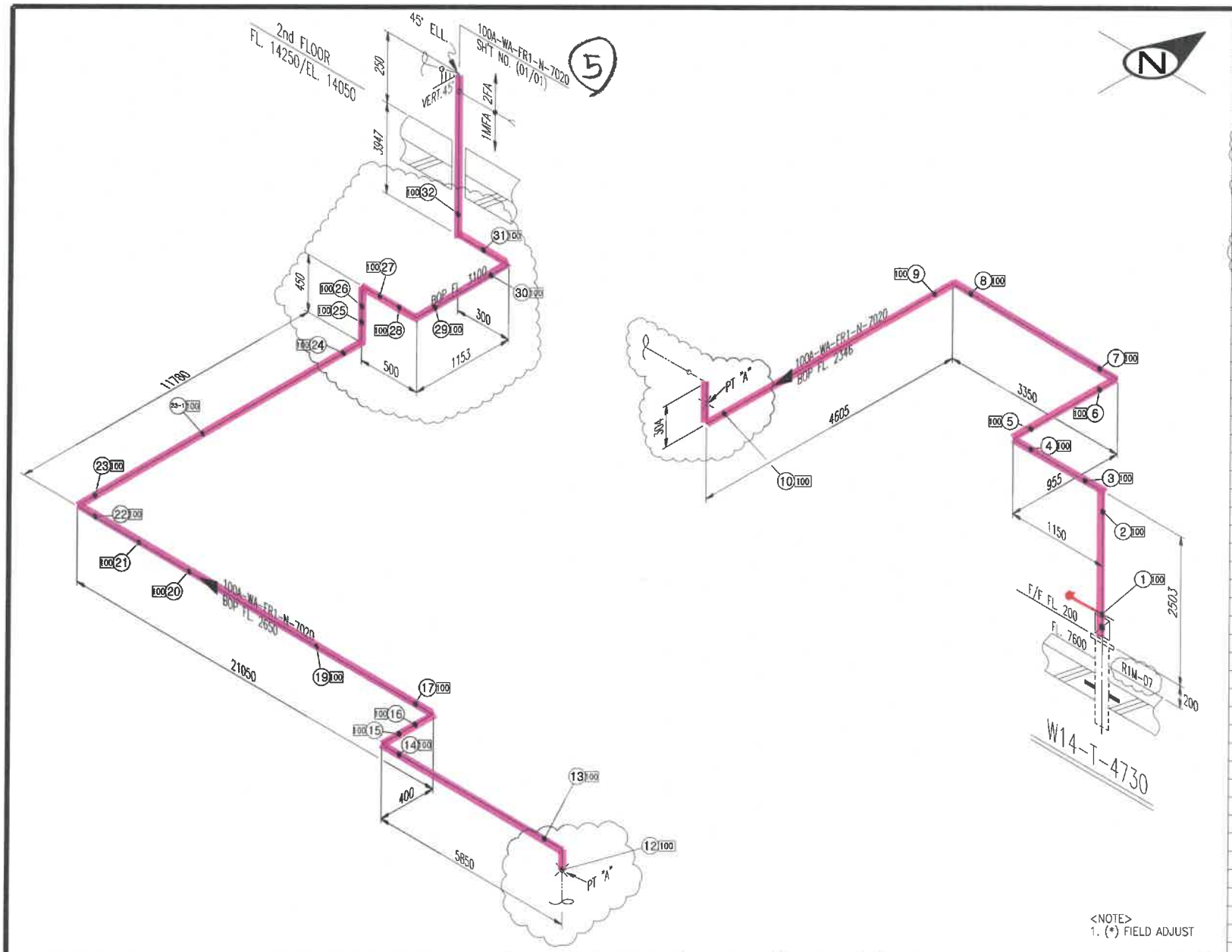

<NOTE>
1. (*) FIELD ADJUST

ITEM	SIZE	Q'TY	DESCRIPTION
		FR1	
P	100A	58.7M	PIPE, FRP(MANUFACTURER STD), PE/BUTT-JOINT, 3.2T
E90	100A	14EA	ELBOW 90 DEG, FRP(MANUFACTURER STD), BUTT-JOINT, 3.2T
F	100A	1EA	FLG, KS 10K, FF, FRP(MANUFACTURER STD), BUTT-JOINT
G	100A	2EA	GASKET, KS 10K, FF, EPDM, 3.0MM TH'K
VP	250A	1EA	DAMPER, KS 10K, FF, BODY-FRP / ORING-EPDM, LEVER
B	100A	2SET	MACHINE BOLT & NUTS :STS 304 / W WASHERS

* PIPE : P/P1 * 90° ELBOW : E90 * 45° ELBOW : E45 * TEE : T * RED.TEE : TR * STUB-IN : STU * REINFORCING PAD : RP * CON.RED : RC * ECC.RED : RE * CON.SWAGE : RCS/RCS1 * ECC.SWAGE : RES/RES1 * NIPPLE : NP/NP1/NP2 * CAP : CAP/CAP1 * PLUG : PLG * FULL COUPLING : FC * HALF COUPLING : HF/HF1
* STUB-IN : STU * SOCKET(HDPE/PVC) : SC * SADDLE(HDPE) : SD * FLANGE : F/F1 * GASKET : G/G1/G2 * BOLT & NUT : B/B1 * BLIND FLANGE : FB/FB1 * GATE VA. : VG/VG1/VG2 * BALL VA. : VB/VBL0/VB1/VB1L0/VB2/VB2L0 * BUTTERFLY VA. : VF/VF4 * CHECK VA. : VC/VC1/VC2/VC3/VC4/VC5/VC6/VC7
* GLOBE VA. : VL/VL1/VL2 * DIAPHRAGM VA. : VD/VDL0 * DAMPER : VP * QUICK COUPLING : SQC * FLEXIBLE JOINT(STEEL) : FLXB * FLEXIBLE JOINT(RUBBER) : FLXR * FLEXIBLE JOINT(STEEL PTFE LINED) : FLXL * FLEXIBLE HOSE : FLXH * STEAM TRAP : ST * SPRAY NOZZLE : SPN * EMERGENCY SHOWER : SSH
* STRAINER(Y-TYPE) : YSTR * STRAINER(T-TYPE) : TSTR * STRAINER(BUCKET-TYPE) : BSTR * ANCHOR PLATE : STOP * BIRD SCREEN : BS * ISOLATION KIT : IK * UNLOADING BOX : UB * AIR TRAP : AT * LOTO : LOTO * SIGHT GLASS : SG * PRESSURE GAUGE : PG * SHILED : SH * SPECIAL BOLT & NUT : BL/BL1

CLIENT SK hynix 6

INSULATION	CODE	N	CONDITION	PRESS. (kg/cm2g)	TEMP. (°C)
	THICK.	-	DESIGN	6.4	60
			OPERATING	4	AMB

AREA W14
UNIT R1MF
REF. PLAN DWG. CJ-M15W14-PI-A30-010018-A
REF. P & ID CJ-M15W14-PR-A20-000504

REV. NO.	DATE	DESCRIPTION	BY	CHK	APP'D
1	25.03.31	REVISED AS MARKED	황래종	안남후	박동영
0	25.01.24	APPROVED FOR CONSTRUCTION	황래종	안남후	박동영

CONTRACTOR SK ecoplant
PROJECT NAME M15X Ph4 Project
COMMODITY WA
JOB NO. 22330D
LINE NO. 100A-WA-FR1-N-7020
SH'T NO. 01 / D1
REV. 1

경고 : 본 도면은 SK HYNIX의 기업비밀 자료로서, 어떠한 경우에도 목적 외 사용, 복제, 제3자에게 공개, 누설 및 유출할 수 없으며, 회사는 유포자의 불법 사용으로 피해가 발생할 경우 유포자에게 민/형사상 책임을 요구할 수 있음.

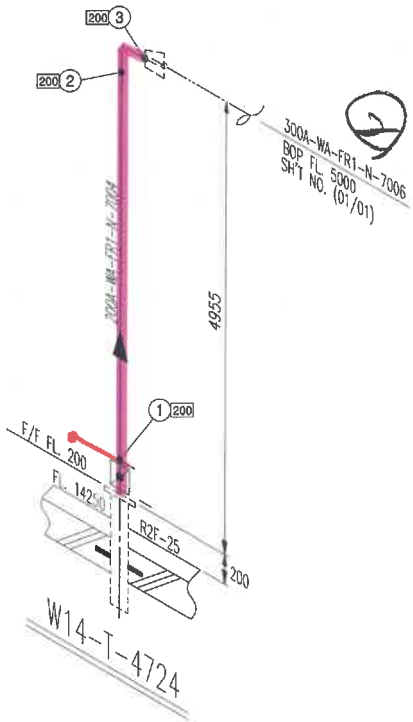

ITEM	SIZE	Q'TY	DESCRIPTION
		FR1	
P	200A	5.0M	PIPE, FRP(MANUFACTURER STD), PE/BUTT-JOINT, 3.2T
E90	200A	1EA	ELBOW 90 DEG, FRP(MANUFACTURER STD), BUTT-JOINT, 3.2T
F	200A	1EA	FLG, KS 10K, FF, FRP(MANUFACTURER STD), BUTT-JOINT
VP	200A	1EA	DAMPER, KS 10K, FF, BODY-FRP / DRING-EPDM, LEVER
G	200A	2EA	GASKET, KS 10K, FF, EPDM, 3.0MM TH'K
B	200A	2SET	MACHINE BOLT & NUTS :STS 304 / W WASHERS

<NOTE>
1. TRAY & ANGLE,CHANNEL SUPPORT가 적용되는 배관 ELEVATION은 현장 맞춤으로 한다.
2. (*) FIELD ADJUST

* PIPE : P/P1 * 90' ELBOW : E90 * 45' ELBOW : E45 * TEE : T * RED.TEE : TR * STUB-IN : STU * REINFORCING PAD : RP * CON.RED : RC * ECC.RED : RE * CON.SWAGE : RCS/RCS1 * ECC.SWAGE : RES/RES1 * NIPPLE : NP/NP1/NP2 * CAP : CAP/CAP1 * PLUG : PLG * FULL COUPLING : FC * HALF COUPLING : HF/HF1
* STUB-IN : STU * SOCKET(HDPE/PVC) : SC * SADDLE(HDPE) : SD * FLANGE : F/F1 * GASKET : G/G1/G2 * BOLT & NUT : B/B1 * BLIND FLANGE : FB/FB1 * GATE VA. : VG/VG1/VG2 * BALL VA. : VB/VB1.0/VB1/VB1.0/VB2/VB2.0 * BUTTERFLY VA. : VF/VF4 * CHECK VA. : VC/VC1/VC2/VC3/VC4/VC5/VC6/VC7
* GLOBE VA. : VL/VL1/VL2 * DIAPHRAGM VA. : VD/VD1.0 * DAMPER : VP * QUICK COUPLING : SQC * FLEXIBLE JOINT(STEEL) : FLXB * FLEXIBLE JOINT(RUBBER) : FLXR * FLEXIBLE JOINT(STEEL_PTFE LINED) : FLXL * FLEXIBLE HOSE : FLXH * STEAM TRAP : ST * SPRAY NOZZLE : SPN * EMERGENCY SHOWER : SSH
* STRAINER(Y-TYPE) : YSTR * STRAINER(T-TYPE) : TSTR * STRAINER(BUCKET-TYPE) : BSTR * ANCHOR PLATE : STOP * BIRD SCREEN : BS * ISOLATION KIT : IK * UNLOADING BOX : UB * AIR TRAP : AT * LOTO : LOTO * SIGHT GLASS : SG * PRESSURE GAUGE : PG * SHILED : SH * SPECIAL BOLT & NUT : BL/BLT

CLIENT SK hynix

7

INSULATION	CODE	N	CONDITION	PRESS. (kg/cm2g)	TEMP. (°C)
	THICK.	–	DESIGN	6.4	60
			OPERATING	4	AMB

AREA W14
UNIT R2FA
REF. PLAN DWG. CJ-M15W14-PI-A30-020015-A
REF. P & ID CJ-M15W14-PR-A20-000502,000503

REV. NO.	DATE	DESCRIPTION	BY	CHK	APP'D
0	25.01.24	APPROVED FOR CONSTRUCTION	황래종	안남후	박종영

CONTRACTOR SK ecoplant
COMMODITY WA
LINE NO. 200A-WA-FR1-N-7004
PROJECT NAME M15X Ph4 Project
JOB NO. 22330D
SH'T NO. 01 / 01
REV. 0

경고 : 본 도면은 SK HYNIX의 기업비밀 자료로서, 어떠한 경우에도 목적 외 사용, 복제, 제3자에게 공개, 누설 및 유출할 수 없으며, 회사는 유포자의 불법 사용으로 피해가 발생할 경우 유포자에게 민/형사상 책임을 요구할 수 있음.

PUNCH LIST

Project No : 22330D

Project Title : M15X Ph3 Project

Package No :

Date :

S/N	Drawing No	Description	Category A B C	Punch Clear Status			
				작성자		확인자	
				Name	Sign	Name	Sign
1							
2							
3							
4							
5							
6							
7							
8							
9							
10							
11							
12							
13							
14							
15							

Remarks

A : Before Hydro Test

B : Before M/C

C : Before Commissioning